HPH GmbH

HPH GmbH

Handel-Projektierung-Hydrauliksysteme
Im Bocksacker 21 - D 27628 Bramstedt

Tel: 04746-93884-14
Fax: 04746-93884-22
e-mail: info@hph-gmbh.de
Internet: www.HPH-GmbH.de

Diaphragm accumulators

General information

Hydraulic accumulators are hydrostatic devices which can store definite energy and transmit it to the hydraulic system on demand. Therefore they are also called hydraulic accumulators. Fluids have only a very little compressibility, however, gases have a good compressibility.
This difference is based on the working principle of all gasloaded hydraulic accumulators. When charging a definite gas volume under pressure with a higher fluid pressure, the gas volume is reduced at rising pressure, and the gas and fluid pressure rise.
When the fluid pressure drops, the fluid is forced back in to the respective circuit because of the effort of the gas to extend as long as the pressure is compensated again.

Tel: 04746-93884-14
Fax: 04746-93884-22
e-mail: info@hph-gmbh.de
Internet: www.HPH-GmbH.de

Permissible pressure ratios

- minimum pressure ratio

The following applies to bladder and diaphragm accumulators:

$$p_1 \geq 1{,}1 \times p_0$$

The minimum hydraulic pressure p_1 should always be a little higher thanthe pre-set gas pressure p_0 in order to avoid constant impacts of the bladder on the oil discharge plug when the accumulator is empty.

- maximum pressure ratio

The following applies to bladder accumulators:

$$p_2 \geq 4 \times p_0$$

The following applies to diaphragm accumulators:

$$V_0 = 0{,}16 - 2{,}0\text{l}$$
$$P_2 \geq 8 \times p_0$$
$$V_0 = 2{,}8\text{l}$$
$$P_0 \geq 4 \times p_0$$

Oil volume

Depending on the pressures P_0, p_1, P_2, the gas volumes V_0 , V_1 , V_2 change.
The oil volume available ΔV iscalculated as follows:

$$\Delta V = V_2 - V_1$$

Tel: 04746-93884-14
Fax: 04746-93884-22
e-mail: info@hph-gmbh.de
Internet: www.HPH-GmbH.de

Diaphragm accumulator

Design

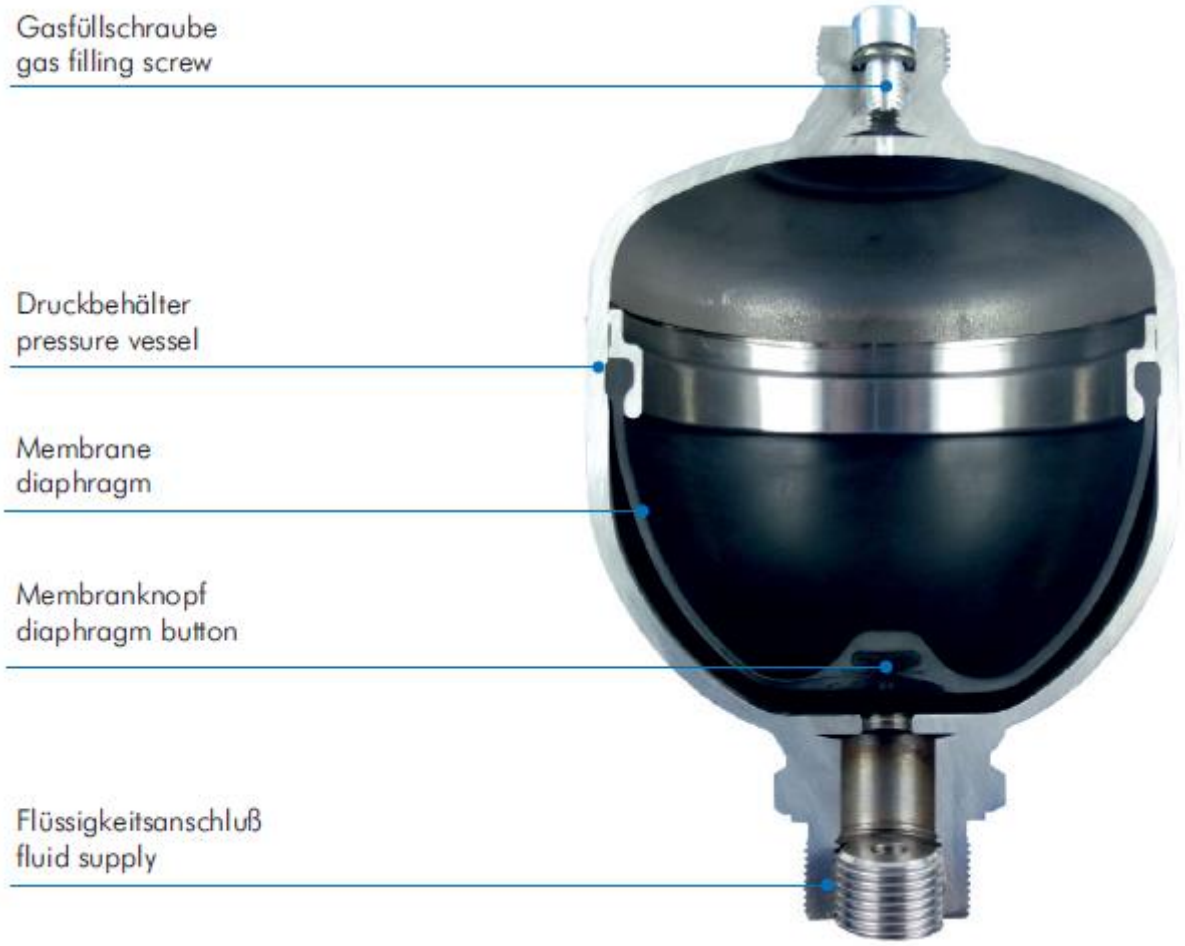

The diaphragm accumulator consists of a welded pressure chamber on the oil side of which a connection tube is welded. The separation of the gas and the fluid is carried out by a diaphragminserted inadvance. There is a diaphragm button in the bottom of the diaphragm to prevent the diaphragm completely from destruction when the vessel is discharged. The diaphragm accumulator can be refilled by means of a gas filling screw or can be closed so that it is inseparable on the gas side. The fluid supply is available in different versions.

Replacement of the diaphragm is not possible!

HPH GmbH

Handel-Projektierung-Hydrauliksysteme
Im Bocksacker 21 - D 27628 Bramstedt

Tel: 04746-93884-14
Fax: 04746-93884-22
e-mail: info@hph-gmbh.de
Internet: www.HPH-GmbH.de

Designation - Example of order

MS	2,0	-	210 /	1 /	N /	A2 /	040 /	T /	CE
1	2		3	4	5	6	7	8	9

1 Accumulator type MS diaphragm accumulator

2 Nominal volume

3 Max. permissible operating pressure according to 97/23/EC (bar)

4 Design
- 1 gas can be refilled
- 2 gas cannot be refilled

5 Diaphragm material
- N - NBR
- E - ECO(Hydrin)
- B - IIR (Butyl)
- V - FKM (Viton)

6 Fluid supply shape (see table)

7 Precharge pressure P_0 (bar) at 20°C

8 Accumulator material
- N - C-steel
- R - stainless steel (e. g. 1.4571)
- T - steel for temperatures down to -40°C
- R/N - stainless steel /C-steel

9 Acceptance test – codes CE Directive 97/23/EC

Tel: 04746-93884-14
Fax: 04746-93884-22
e-mail: info@hph-gmbh.de
Internet: www.HPH-GmbH.de

Dimensions

Diaphragm accumulator,
welded construction

Diaphragm not exchangeable!

Design1

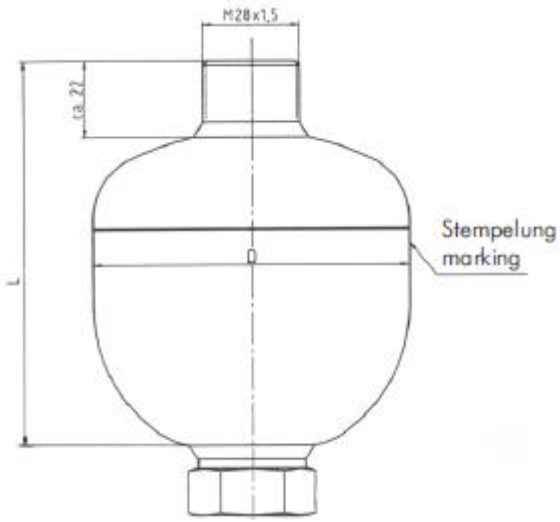

Design2

Fluid supplies

Shape A2

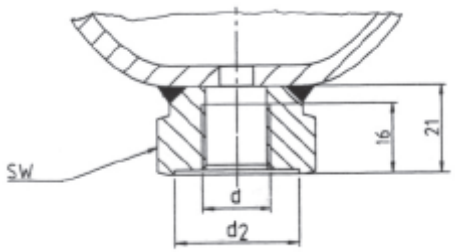

Shape B1

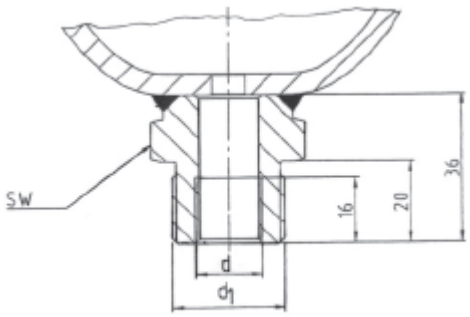

HPH GmbH

HPH GmbH

Handel-Projektierung-Hydrauliksysteme
Im Bocksacker 21 - D 27628 Bramstedt

Tel: 04746-93884-14
Fax: 04746-93884-22
e-mail: info@hph-gmbh.de
Internet: www.HPH-GmbH.de

Typ	Nenn-volumen nominal volume V_n (l)	max. Betriebsdruck max. operating pressure		zul. Druck-verhältnis perm. pressure ratio $p_2 : p_1$	Gewicht weight G (kg)	max. zul. Volumenstrom max. perm. flow Q (l/min)	Abmessungen dimensions					
		Normalstahl standard steel p (bar)	Edelstahl stainless steel p (bar)				L (mm)	D (mm)	d_1 (mm)	d (Zoll)	d_2 (mm)	SW (mm)
MS 0,075	0,075	250	-	8 : 1	0,7	35	90	64		G ½	29	32
MS 0,16	0,16	250	180	8 : 1	0,9	35	101	74		G ½	29	32
MS 0,25	0,25	210	160	8 : 1	1,1	35	107	84		G ½	29	32
MS 0,32	0,32	210	160	8 : 1	1,3	80	116	93		G ½	29	32
MS 0,50	0,50	210	150	8 : 1	1,7	80	130	104,5	M 33 x 1,5	G ½	29	41
MS 0,50	0,50	330	-	8 : 1	2,4	80	136	110	M 33 x 1,5	G ½	34	41
MS 0,60	0,60	330	-	4 : 1	2,7	80	148	110	M 33 x 1,5	G ½	34	41
MS 0,75	0,75	150	-	8 : 1	2,1	80	141	117	M 33 x 1,5	G ½	34	41
MS 0,75	0,75	210	140	8 : 1	2,8	80	145	121	M 33 x 1,5	G ½	34	41
MS 0,75	0,75	330	-	8 : 1	3,5	80	149	125	M 33 x 1,5	G ½	34	41
MS 1,00	1,00	210	150	8 : 1	3,6	80	155	136	M 33 x 1,5	G ½	34	41
MS 1,40	1,40	140	-	8 : 1	5,2	80	178	150	M 33 x 1,5	G ½	34	41
MS 1,40	1,40	210	150	8 : 1	5,2	80	178	150	M 33 x 1,5	G ½	34	41
MS 1,40	1,40	250	-	8 : 1	5,2	80	178	150	M 33 x 1,5	G ½	34	41
MS 2,00	2,00	100	100	8 : 1	5,5	140	192	163	M 33 x 1,5	G ½	34	41
MS 2,00	2,00	210	-	8 : 1	6,6	140	196	166	M 33 x 1,5	G ½	34	41
MS 2,00	2,00	250	-	8 : 1	7,5	140	200	170	M 45 x 1,5	G ¾	45	46
MS 2,20	2,20	80	-	8 : 1	5,7	140	208	163	M 33 x 1,5	G ½	34	41
MS 2,80	2,80	210	-	4 : 1	8,2	140	248	166	M 33 x 1,5	G ½	34	41
MS 2,80	2,80	-	100	4 : 1	6,0	140	244	163	M 33 x 1,5	G ½	34	41
MS 2,80	2,80	250	-	4 : 1	10	140	248	170	M 45 x 1,5	G ¾	44	46
MS 2,80	2,80	350	-	4 : 1	15	140	258	180	M 45 x 1,5	G ¾	44	46
MS 3,50	3,50	250	-	4 : 1	11,6	140	285	170	M 45 x 1,5	G ¾	44	46
MS 3,50	3,50	350	-	4 : 1	18	140	295	180	M 45 x 1,5	G ¾	44	46

Characteristics

Installation position
as desired

Fastening
clamp straps or screw-in socket

Permissible operating temperature
-40° C to +80° C

Charging gas
Use nitrogen only!
(Oxygen means danger of explosion.)

Fluids

hydraulic oil, other fluids on request