HPH GmbH

**HPH GmbH**

Handel-Projektierung-Hydrauliksysteme
Im Bocksacker 21 - D 27628 Bramstedt

Tel: 04746-93884-14
Fax: 04746-93884-22
e-mail: info@hph-gmbh.de
Internet: www.HPH-GmbH.de

# MPF4002A-G2P25

**Return filter 1 ½”**

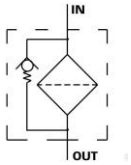

| | |
|---|---|
| **Return filter** | 1 ½” |
| **Part number:** | MPF4002P25 |
| **Technical information:** | Suitable for mineral oils bypass opening pressure of 1.75 bar. For an effective return filter clogging indicator must be provided. |
| **Material:** | Cavity: Aluminium |
| **Seals:** | NBR, viton on request |
| **Mounting:** | Tank mounting |
| **Filtering:** | From inside to outside |
| **Pressure drop:** | Flow dependent |
| **Unit:** | Each |
| **Working pressure:** | 3 bar |
| **Temperature:** | -25° C till +110° C |
| **Flow:** | Viscosity 46 (Cst) Temperature 40 degree |
| **Filter fineness:** | 25 µm |
| **A (BSP)** | 11/2“ |
| **Outlet (l/min)** | 600 |
| **Separate element** | MF 400-2-P25-N-B |
| **Material element** | Paper |
| **Resistance of pressure difference (bar)** | 3 |

HPH GmbH

**HPH GmbH**

Handel-Projektierung-Hydrauliksysteme
Im Bocksacker 21 - D 27628 Bramstedt

Tel: 04746-93884-14
Fax: 04746-93884-22
e-mail: info@hph-gmbh.de
Internet: www.HPH-GmbH.de

## Flow – diagram

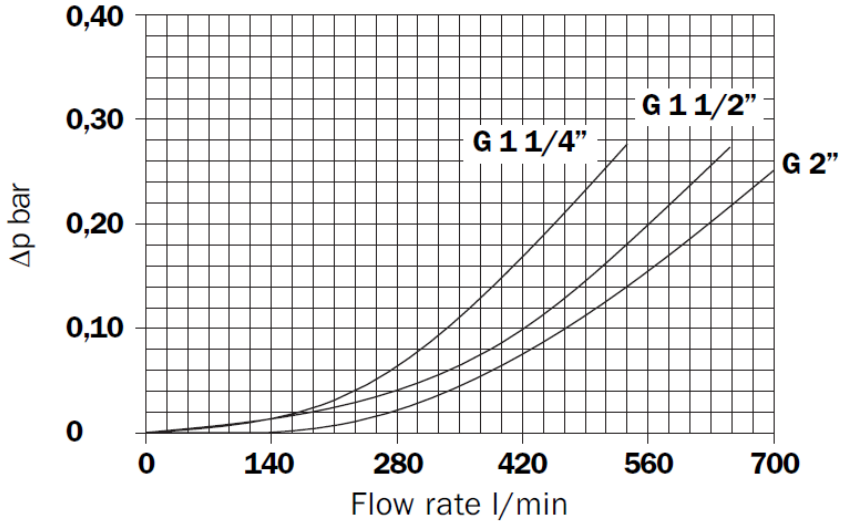


| | | | | | | | | | |
|---|---|---|---|---|---|---|---|---|---|
| **MPF 400** | 1 | 150 | 175 | 330 | 370 | 550 | 385 | 650 | 680 |
| | 2 | 230 | 250 | 440 | 445 | 650 | 550 | 380 | 730 |
| | 3 | 245 | 290 | 470 | 550 | 680 | 710 | 735 | 740 |

## Construction dimension

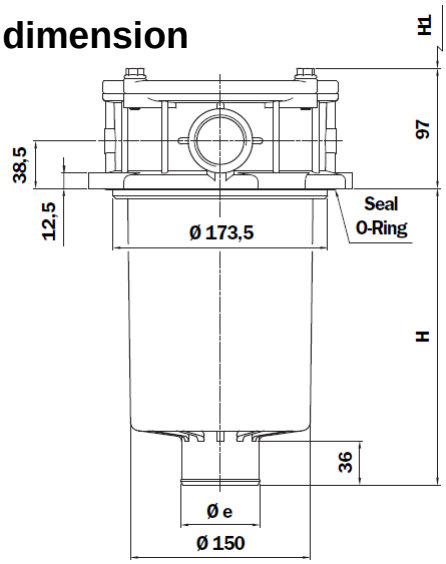


**Holes on the tank**

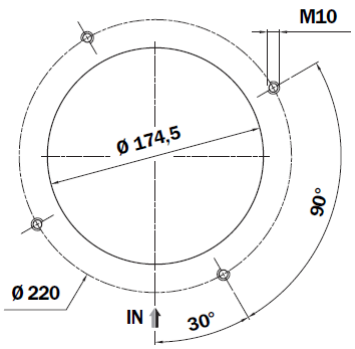


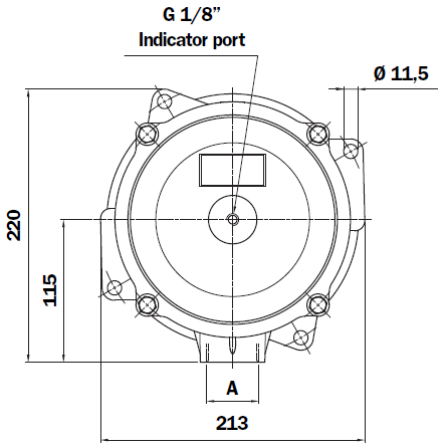


**MPF 400**
**Thread connections**

| Type | A |
|---|---|
| G1 | G 1 1/4" |
| G2 | G 1 1/2" |
| G3 | G 2" |
| G4 | 1 1/4" NPT |
| G5 | 1 1/2" NPT |
| G6 | 2" NPT |
| G7 | SAE 20 - 1 5/8" - 12 UN |
| G8 | SAE 24 - 1 7/8" - 12 UN |
| G9 | SAE 32 - 2 1/2" - 12 UN |

| Length Filter | H mm | H1 mm | Ø e mm |
|---|---|---|---|
| 1 | 180 | 200 | 51 |
| 2 | 240 | 250 | 64 |
| 3 | 290 | 310 | 64 |

Subject to modifications