HPH GmbH

HPH GmbH

Handel-Projektierung-Hydrauliksysteme
Im Bocksacker 21 - D 27628 Bramstedt

Tel: 04746-93884-14
Fax: 04746-93884-22
e-mail: info@hph-gmbh.de
Internet: www.HPH-GmbH.de

Serie MG AIR 2000K

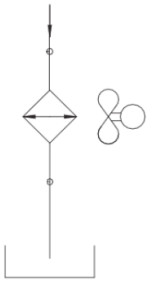

2010K
2024K
2040K
2050K

Air-oil heat exchangers are used for cooling oil hydraulic systems using as the coolant ambient air that passes over the radiant by means of a fan operated by an electric or hydraulic motor.
The cooler element, in high resistance aluminium alloy, is obtained by means of a braze-welding process carried out under vacuum. The particular configuration of the cooling pipes increase the turbulence of the fluid consequently of the exchange capacity; moreover, the presence of special jets on the cooler finning further improves the total transmission coefficient.
The result is a very small, light and robust technologically advanced product.

Compatible fluids

- MINERAL OILS, HL, HLP.
- WATER-OIL EMULSION.
- WATER-GLYCOL.
- Consults HPH for other fluids.

Technical specification of Cooler Element

- Material: “Long Life” aluminium.
- Operating Pressure: 20 bar.
- Test pressure: 35 bar.
- Max operating temperature: 120°c.
- For specially “aggressive” atmospheres contact HPH

Installation

The exchanger can be fitted in a horizontal position, respecting the minimum distance from the wall (see fig.1) so as to ensure a natural flow of cooling air. The exchanger is usually installed on oil tank return piping; it must also be protected from impacts and mechanical vibrations by supports and must be connected to the plant with flexible pipes. Avoid subjecting the exchanger to sudden changes in flow, hammering and pulsations that can cause irreversible damage to the element. We recommend installing a by-pass valve (see fig.2) to protect the exchanger from over-pressure generated when the plants is started up due to high oil viscosity.

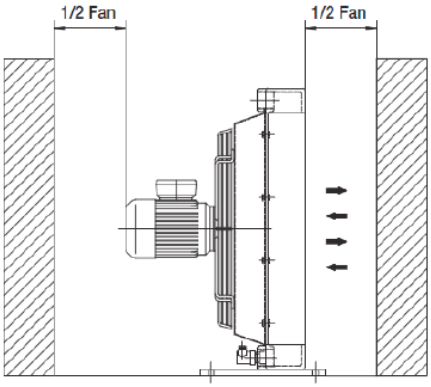

Fig.1

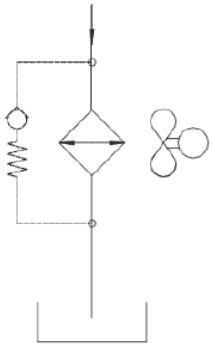

Fig.2

Example of how to choose a heat exchanger

Proceed with sizing the exchanger, with a knowledge of the data as the example below shows:

Power to dissipate:	9	[KW]
ISO VG32 oil flow:	90	[lpm]
Oil input temperature:	60	[°C]
Ambient temperature:	30	[°C]

Fan operating with an electric motor 230/400V-50 Hz.

You can then calculate the specific heat exchange power KW/°C if you know the power to dissipate and the ΔT (the difference between the oil input temperature and the ambient temperature).

$$P = \frac{9\ \text{kw}}{60°\text{w} - 30°} = 0{,}3\ \text{KW/°C}$$

Note the oil flow (90lpm) and specific exchange power (0,3 KW/°C), product research is made by referring to the graph in the catalogue which is relevant to each model.

HPH GmbH

HPH GmbH

Handel-Projektierung-Hydrauliksysteme
Im Bocksacker 21 - D 27628 Bramstedt

Tel: 04746-93884-14
Fax: 04746-93884-22
e-mail: info@hph-gmbh.de
Internet: www.HPH-GmbH.de

Ordering Code

Cooler series

MG AIR 20xxK

Cooler model

Fan motor type

01 AC 230V 50Hz
03 AC 230V-400V 50-60Hz
04 AC 230V-400V 50-60Hz (B14)
12 DC 12V
24 DC 24V
56 prep. Hydraulic motor GR2.

Thermostats

1. fixed thermostat	40-28°C
2. fixed thermostat	50-38°C
3. fixed thermostat	60-48°C
4. fixed thermostat	70-58°C
5. fixed thermostat	80-68°C
6. fixed thermostat	90-78°C
8. adjustable thermostat	0-120°C

Ventilation type

01 suction air flow
02 blowing air flow

HPH GmbH

Handel-Projektierung-Hydrauliksysteme
Im Bocksacker 21 - D 27628 Bramstedt

Tel: 04746-93884-14
Fax: 04746-93884-22
e-mail: info@hph-gmbh.de
Internet: www.HPH-GmbH.de

Dimensions: 2050K

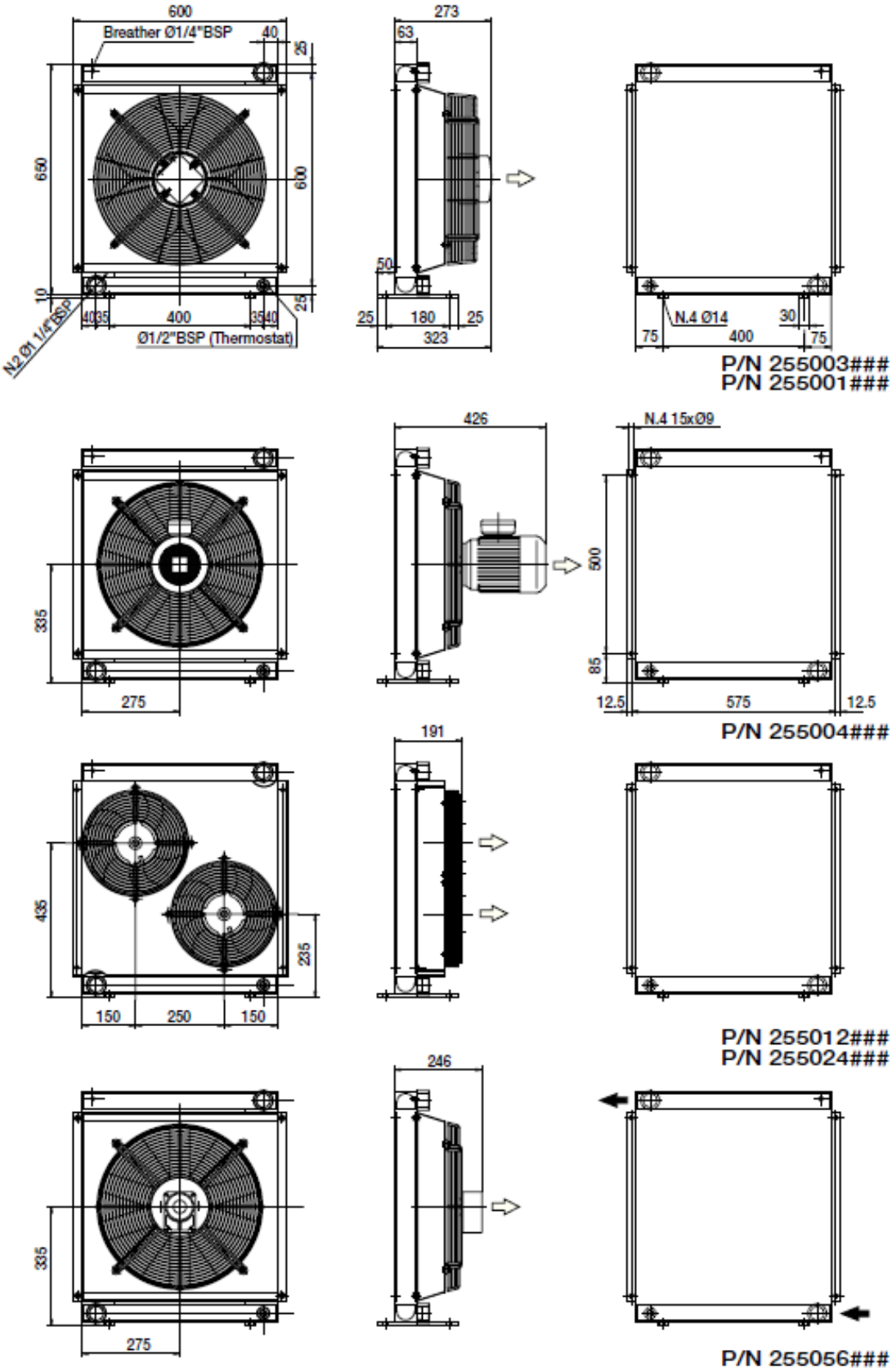

Over-all dimensions and technical characteristic are not binding

HPH GmbH

HPH GmbH

Handel-Projektierung-Hydrauliksysteme
Im Bocksacker 21 - D 27628 Bramstedt

Tel: 04746-93884-14
Fax: 04746-93884-22
e-mail: info@hph-gmbh.de
Internet: www.HPH-GmbH.de

Dimensions: 2050K

P/N	V	Hz	KW	A	rpm	Ø Fan	dB (A)	(m³/h)	IP	lt	Kg
2050K###	230 -400AC	50/60	0,43	0,9	1340	450	76	5000	54		27
2050K###	230-400 AC B14	50/60	0,75	1,88	1450	450	79	5200	55		30
2050K12###	12 DC	/	0,15	9,5	3100	280	76	2000	68	1,6	24
2050K24###	24 DC	/	0,15	5,6	3100	280	79	2000	68		24
2050K56###	Prepared for Gr.2 hydraulic motor				☎	450	☎	☎	/		23

☎ HPH Contact

Performance diagram

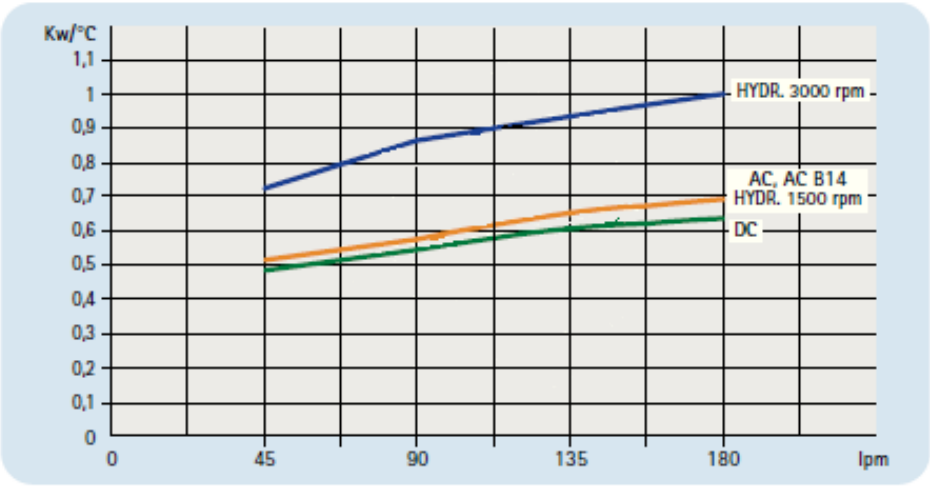

Pressure drop (ISO VG 32)

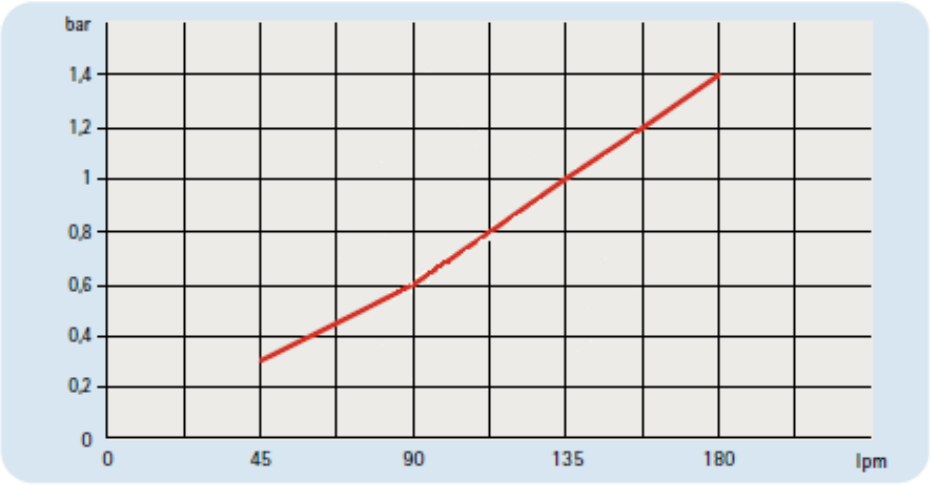

Correction factor F (Pressure drop)

cst	10	15	20	30	40	50	60	80	100	200	300
F	0,5	0,65	0,77	1	1,2	1,4	1,6	1,9	2,1	3,3	4,3